Bolted joint (without gasket) verification

COPY COMPLIANT to the original document resident on the computer system at the time of printing

Index

1. Purpose 3
2. Abbreviations and symbols.....3
3. Scope. 4
4. Design procedure. 5
4.1. Bolted joint description. 5
4.2. Fastener stiffness.....5
4.3. Flanges stiffness. 6
4.4. Connection calculations. 6
4.5. Nut thickness verification. 7
5. Acceptability criteria.....8
6. References 8

COPY COMPLIANT to the original document resident on the computer system at the time of printing

1. Purpose

This document describes the procedure to complete a bolted joint (without gasket) verification by formula. A calculation sheet called Mod.432 is available.

2. Abbreviations and symbols.

$A_t = tensile\ area\ of\ the\ threaded\ part\ of\ the\ bolt$

$A_u = tensile\ area\ of\ the\ unthreaded\ part\ of\ the\ bolt$

$d = nominal\ diameter\ of\ threaded\ part$

$d_n = nut\ diameter$

$d_r = tensile\ bolt\ diamenter$

$d_t = nominal\ diameter\ of\ threaded\ part$

$d_u = nominal\ diameter\ of\ threaded\ part$

$E_b = Young's\ modulus\ of\ bolt\ material$

$E_f = Young's\ modulus\ of\ flange\ material$

$F_0 = tightening\ force$

$F_e = external\ force\ on\ bolt$

$F_b = part\ of\ external\ force\ that\ increases\ traction\ on\ stud$

$F_f = part\ of\ external\ force\ that\ reduces\ contact\ pressure$

$F_{max} = maximum\ admissible\ load\ on\ thread$

$k_b = axial\ stiffness\ of\ the\ bolt$

$k_f = flange\ stiffness$

$k_t = axial\ stiffness\ of\ the\ threaded\ part\ of\ the\ bolt$

$k_u = axial\ stiffness\ of\ the\ unthreaded\ part\ of\ the\ bolt$

$L_e = bolt\ effective\ total\ lenght$

$L_h = lenght\ of\ threaded\ part\ of\ the\ hole\ that\ grips\ the\ bolt$

COPY COMPLIANT to the original document resident on the computer system at the time of printing

$L_t = lenght\ of\ the\ threaded\ part\ of\ the\ bolt$

$L_u = lenght\ of\ the\ unthreaded\ part\ of\ the\ bolt$

$n_t = number\ of\ threads\ gripping\ the\ nut$

$p = pitch$

$s_w = washer\ thickness$

$t = flange\ thickness$

$\alpha = half\ apex\ angle\ of\ Rotscher\ pressure\ cone$

$\delta = change\ of\ \delta_b\ and\ \delta_f\ due\ to\ F_e$

$\delta_b = \ stud\ elongation\ due\ to\ F_0$

$\delta_f = \ flange\ compression\ due\ to\ F_0$

$\sigma_{b0} = axial\ bolt\ stress\ due\ to\ F_0$

$\sigma_b = axial\ bolt\ stress\ due\ to\ F_0\ and\ F_e$

$\sigma_{yb} = bolt\ material\ yield\ stress$

$\sigma_{yf} = flange\ material\ yield\ stress$

$SF = safety\ factor\ for\ tightening\ and\ external\ load$

$SF_0 = safety\ factor\ for\ tightening$

3. Scope.

This procedure is applicable to bolted joints without gasket.

COPY COMPLIANT to the original document resident on the computer system at the time of printing

4. Design procedure.

4.1. Bolted joint description.

The typical bolted joint geometry where these formulas are applicable is shown in Figure 1.

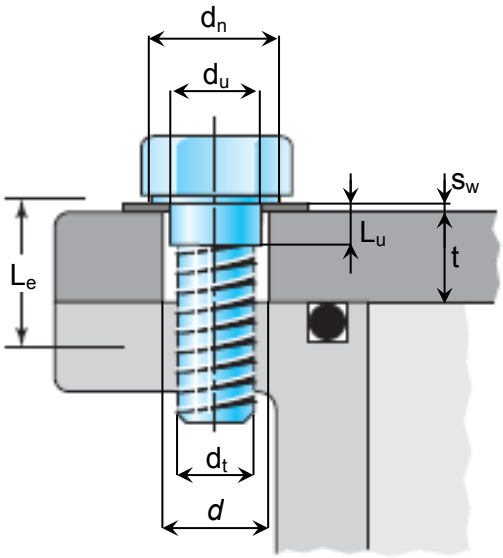

Figure 1: Bolted joint.

The effective grip of the connection is:

$$L_e = s_w + t + {}^{d_t}/_{2}$$

4.2. Fastener stiffness.

The stiffness of the portion of a bolt or screw within the clamped zone will generally consist of two parts, that of the unthreaded shank portion and that of the threaded portion. Thus, the stiffness constant of the bolt is equivalent to the stiffnesses of two springs in series.

$$k_b = \frac{E_b A_t A_u}{A_t L_u + A_u L_t}$$

COPY COMPLIANT to the original document resident on the computer system at the time of printing

4.3. Flanges stiffness.

The stiffness of the flanges in the clamped zone is based on the use of a simplified Rotscher's pressure-cone method with a fixed cone angle. If clamped materials have identical Young's modulus the formula is:

$$k_f = \frac{\pi E_f d \tan \alpha}{2\ln \frac{(l \tan \alpha + d_n - d)(d_w + d)}{(l \tan \alpha + d_n + d)(d_w - d)}}$$

4.4. Connection calculations.

The tightening force is proportional to bolt yield stress, tensile area and tightening ratio.

$$F_0 = \xi \min(A_t, A_u)\, \sigma_{yb}$$

The effects of this force on bolt and flanges are:

$$\delta_b = \frac{F_0}{k_b}$$

$$\delta_f = \frac{F_0}{k_f}$$

$$\delta_0 = \delta_b + \delta_f$$

If a traction external force is active, it modifies the stress on bolt and flanges: this partition of its effect is proportional to the two stiffness previously calculated.

$$F_e = F_b + F_f$$

$$\delta = \frac{F_b}{k_b} = \frac{F_f}{k_f} = \frac{F_e}{k_b + k_f}$$

$$F_b = \frac{k_b F_e}{k_b + k_f}$$

$$F_f = \frac{k_f F_e}{k_b + k_f}$$

F_b increases axial bolt stress, while F_f reduced contact pressure in the connection. Bolt stresses are calculated as:

COPY COMPLIANT to the original document resident on the computer system at the time of printing

$$\sigma_{b0} = \frac{F_0}{A_r}$$

$$\sigma_b = \frac{F_0 + F_b}{A_r}$$

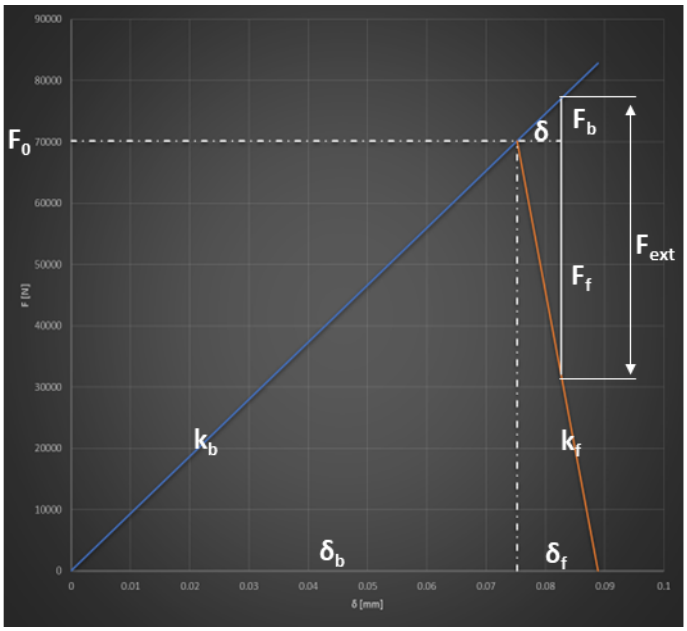

Figure 2: Force-deformation diagram with symbols and names of forces.

4.5. Nut thickness verification.

The maximum allowable nut force is:

$$F_{max} = 75\% \, \pi \, d_t L_h \frac{\sqrt{3}}{3} \sigma_{yf}$$

COPY COMPLIANT to the original document resident on the computer system at the time of printing

5. Acceptability criteria.

Three criteria must be verified:

1. $\sigma_b \leq 90\% \, \sigma_{yb}$
2. $F_f \leq 60\% \, F_0$
3. $F_0 + F_b \leq 80\% \, F_{max}$

6. References

- *Shingley's Mechanical Engineering Design - R. G. Budynas, J. K. Nisbet*
- *Fundamentals of Machine Component Design – R.C. Juvinall, K.M. Marshek*
- *Module Mod.432*

COPY COMPLIANT to the original document resident on the computer system at the time of printing